UNIVERSAL BEAMS (“WFB”) TO ASTM A6

DESIGNATION NOMINAL DEPTH IN INCHES AND MASS IN LBS/FT	DESIGNATION NOMINAL DEPTH IN MM AND MASS IN KG/M	DEPTH OF SECTION MM (h)	WIDTH OF SECTION MM (b)	THICKNESS	
				FLANGE MM (t)	WEB MM (s)
21 x 8.1/4 x 93	533 x 210 x 138	549	214	24	15
21 x 8.1/4 x 83	533 x 210 x 124	544	212	21	13
21 x 8.1/4 x 73	533 x 210 x 109	540	211	19	12
21 x 8.1/4 x 68	533 x 210 x 101	537	210	17	11
21 x 8.1/4 x 62	533 x 210 x 92	533	209	16	10
21 x 8.1/4 x 55	533 x 210 x 82	528	209	13	10
18 x 7.1/2 x 71	457 x 191 x 106	469	194	21	13
18 x 7.1/2 x 65	457 x 191 x 97	466	193	19	11
18 x 7.1/2 x 60	457 x 191 x 89	463	192	18	11
18 x 7.1/2 x 55	457 x 191 x 82	460	191	16	10
18 x 7.1/2 x 50	457 x 191 x 74	457	190	15	9
18 x 7.1/2 x 45	457 x 191 x 67	453	190	13	9
16 x 7 x 57	406 x 178 x 85	417	181	18	11
16 x 7 x 50	406 x 178 x 74	413	180	16	10
16 x 7 x 45	406 x 178 x 67	410	179	14	9
16 x 7 x 40	406 x 178 x 60	407	178	13	8
16 x 7 x 36	406 x 178 x 54	403	177	11	8
16 x 5.1/2 x 31	406 x 140 x 46	403	140	11	7
16 x 5.1/2 x 26	406 x 140 x 39	399	140	9	6
14 x 6.3/4 x 38	356 x 171 x 57	358	172	13	8
14 x 6.3/4 x 34	356 x 171 x 51	355	171	12	7
14 x 6.3/4 x 30	356 x 171 x 45	352	171	10	7
12 x 8 x 50	305 x 203 x 74	310	205	16	9
12 x 8 x 45	305 x 203 x 67	306	204	15	9
12 x 8 x 40	305 x 203 x 60	303	203	13	8
12 x 6.1/2 x 35	305 x 165 x 52	318	167	13	8
12 x 6.1/2 x 30	305 x 165 x 45	313	166	11	7
12 x 6.1/2 x 26	305 x 165 x 39	310	165	10	6
12 x 4 x 22	305 x 102 x 33	313	102	11	7
12 x 4 x 19	305 x 102 x 28	309	102	9	6
12 x 4 x 16	305 x 102 x 24	305	101	7	6
10 x 8 x 45	254 x 203 x 67	257	204	16	9
10 x 8 x 39	254 x 203 x 58	252	203	14	8
10 x 8 x 33	254 x 203 x 49	247	202	11	7
10 x 5.3/4 x 30	254 x 146 x 45	266	148	13	8
10 x 5.3/4 x 26	254 x 146 x 39	262	147	11	7
10 x 5.3/4 x 22	254 x 146 x 33	258	146	9	6
8 x 6.1/2 x 28	203 x 165 x 42	205	166	12	7
8 x 6.1/2 x 24	203 x 165 x 36	201	165	10	6
8 x 5.1/4 x 21	203 x 133 x 31	210	134	10	6
8 x 5.1/4 x 18	203 x 133 x 27	207	133	8	6

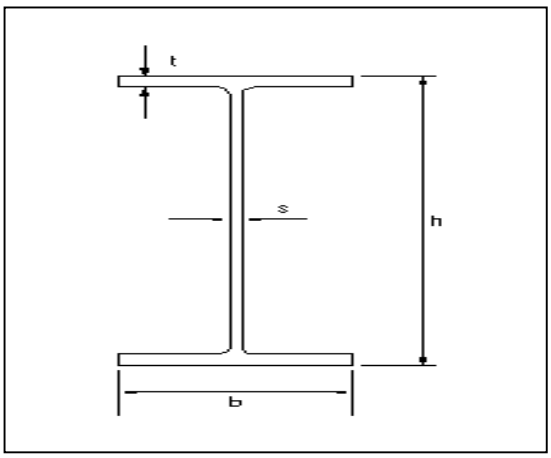

UNIVERSAL COLUMNS TO ASTM A6

DESIGNATION NOMINAL DEPTH IN INCHES AND MASS IN LBS/FT	DESIGNATION NOMINAL DEPTH IN MM AND MASS IN KG/M	DEPTH OF SECTION MM (h)	WIDTH OF SECTION MM (b)	THICKNESS	
				WEB MM (t)	FLANGE MM (s)
12 x 12 x 106	305 x 305 x 158	327	310	25	16
12 x 12 x 96	305 x 305 x 143	323	309	23	14
12 x 12 x 87	305 x 305 x 129	318	308	21	13
12 x 12 x 79	305 x 305 x 118	315	307	19	12
12 x 12 x 72	305 x 305 x 107	311	306	17	11
12 x 12 x 65	305 x 305 x 97	308	305	15	10
10 x 10 x 112	254 x 254 x 167	289	265	32	19
10 x 10 x 100	254 x 254 x 149	282	263	28	17
10 x 10 x 88	254 x 254 x 131	275	261	25	15
10 x 10 x 77	254 x 254 x 115	269	259	22	14
10 x 10 x 68	254 x 254 x 101	264	257	20	12
10 x 10 x 60	254 x 254 x 89	260	256	17	11
10 x 10 x 54	254 x 254 x 80	256	255	16	9
10 x 10 x 49	254 x 254 x 73	254	254	14	9
8 x 8 x 67	203 x 203 x 100	229	210	24	15
8 x 8 x 58	203 x 203 x 86	222	209	21	13
8 x 8 x 48	203 x 203 x 71	216	206	17	10
8 x 8 x 40	203 x 203 x 60	210	205	14	9
8 x 8 x 35	203 x 203 x 52	206	204	13	8
8 x 8 x 31	203 x 203 x 46	203	203	11	7
6 x 6 x 25	152 x 152 x 37	162	154	12	8
6 x 6 x 20	152 x 152 x 30	158	153	9	7
6 x 6 x 15	152 x 152 x 22	152	152	7	6

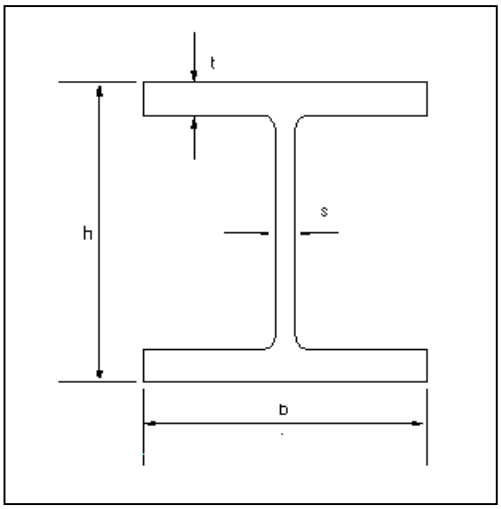

UNIVERSAL BEARING PILES (“H PILES”) TO ASTM A6
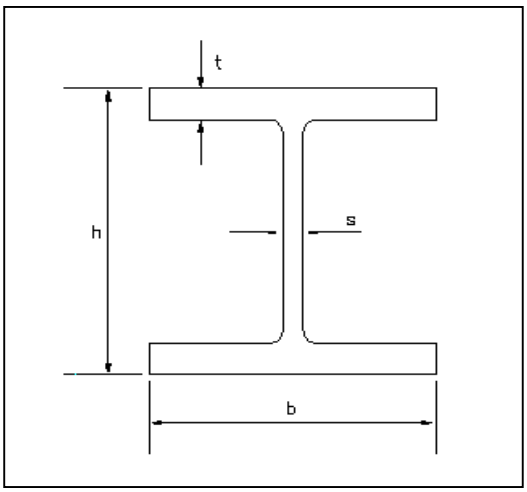
DESIGNATION NOMINAL DEPTH IN INCHES AND MASS LBS/FT	DESIGNATION NOMINAL DEPTH IN MM AND MASS IN KG/M	DEPTH OF SECTION MM (h)	WIDTH OF SECTION MM (b)	THICKNESS	
				FLANGE MM (t)	WEB MM (s)
12 x 12 x 89	305 x 305 x 132	314	313	18	18
12 x 12 x 84	305 x 305 x 125	312	312	17	17
12 x 12 x 74	305 x 305 x 110	308	310	16	15
12 x 12 x 63	305 x 305 x 94	303	308	13	13
12 x 12 x 53	305 x 305 x 79	299	306	10	11
10 x 10 x 57	254 x 254 x 85	254	260	14	14
10 x 10 x 42	254 x 254 x 63	246	256	11	11
8 x 8 x 36	203 x 203 x 54	204	207	11	11