SLEEPER BAR

THIS SECTION IS NOT OFFERED TO THE EXPORT MARKET
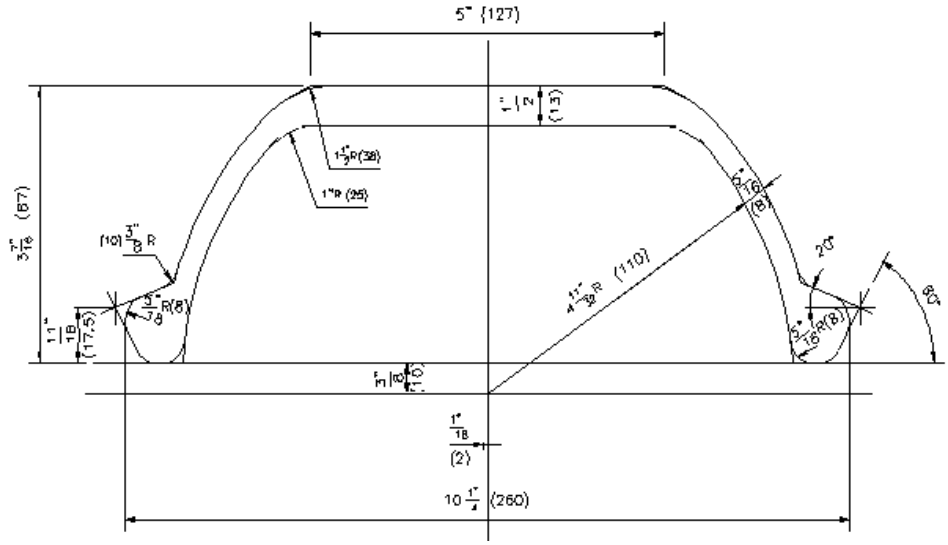
Sleeper bar is produced in a 29.26 kg/m size.